# PRODUKT-INFO

# VERTICAL PUSH SWITCH

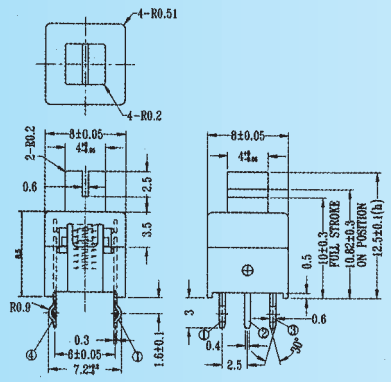

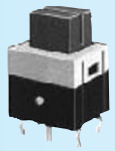

## PB-22E28 (NON-LOCK)

Rating: 0.1A 30V DC
Function: 2P2T
Operating Force: 300gf ± 100gf

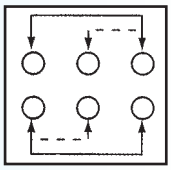

N NON-SHORTING

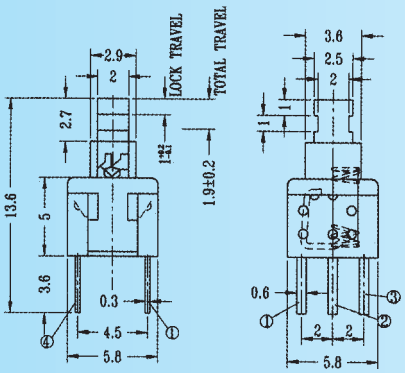

## PB-22E60 (SELF-LOCK) — N NON-SHORTING
## PB-22E70 (NON-LOCK) — N NON-SHORTING
## PB-22E70S (NON-LOCK) — S SHORTING

Rating: 0.1A 12V DC
Function: 2P2T
Operating Force: 150gf ± 50gf

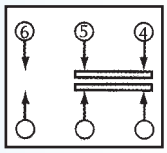

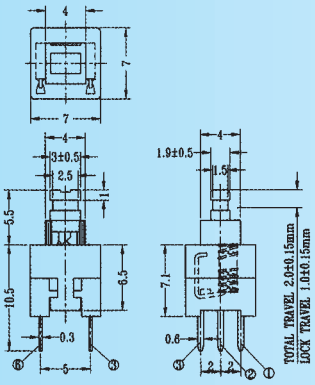

## PB-22E27 (SELF-LOCK)
## PB-22E37 (NON-LOCK)
## PB-22E27T (SELF-LOCK/C TERMINAL)
## PB-22E37T (NON-LOCK/C TERMINAL)

Rating: 0.1A 30V DC
Function: 2P2T
Operating Force: 140gf ± 30gf

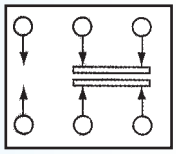

N NON-SHORTING

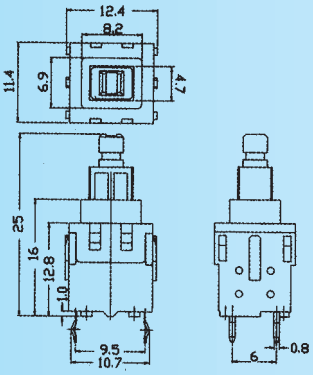

## PB-22E32 (SELF-LOCK)

Rating: 3A 12V DC
Function: 2P1T
Operating Force: 350gf ± 150gf

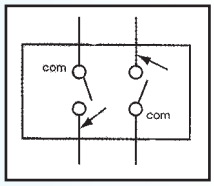


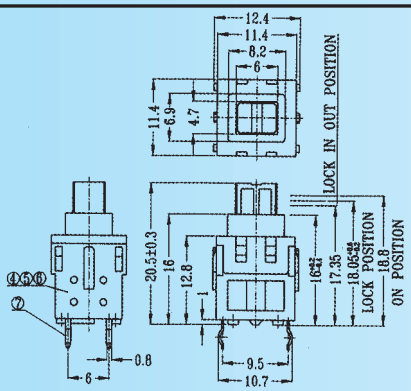

## PB-22E33 (SELF-LOCK)

Rating: 3A 12V DC
Function: 2P1T
Operating Force: 350gf ± 150gf

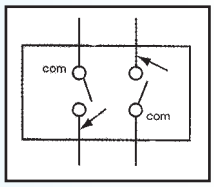


N NON-SHORTING